BODY SPECIFICATIONS
Material: Fiberglass reinforced concrete
Available Colors: Slate Grey, Charcoal Grey

BURNER SPECIFICATIONS
Certification: CSA listed
Heat Output: 50,000 BTU
Material: 304 stainless steel
Fule Type: Natural gas, propane
Ignition: 1.5v DC electronic
Media: Bali beach lava rock

WEIGHT
191 Pounds

OPTIONAL ACCESSORIES
Glass Screen SKU: SCREEN-CA
Canvas Cover SKU: COVER-CA
Natural Gas Conversion Kit SKU: CONVERT-LP

NOTE
Outdoor use Only
Fits: Standard 25 lb portable propane tank

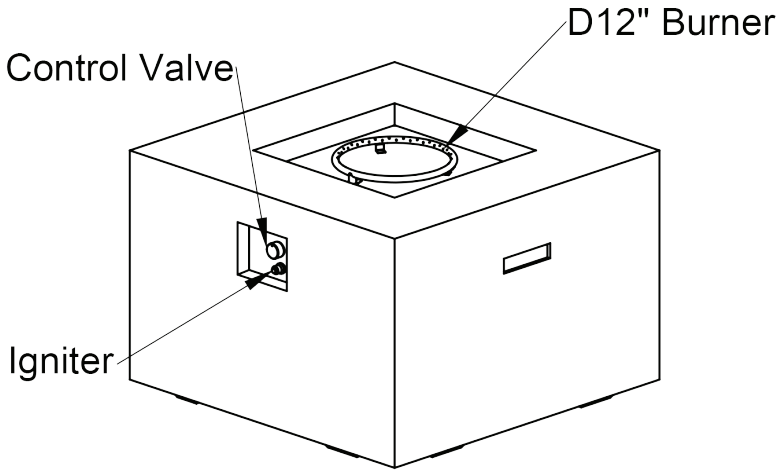

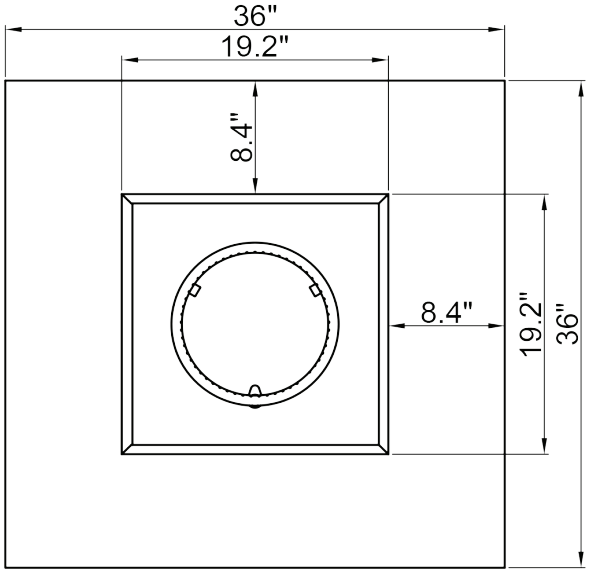

TOP

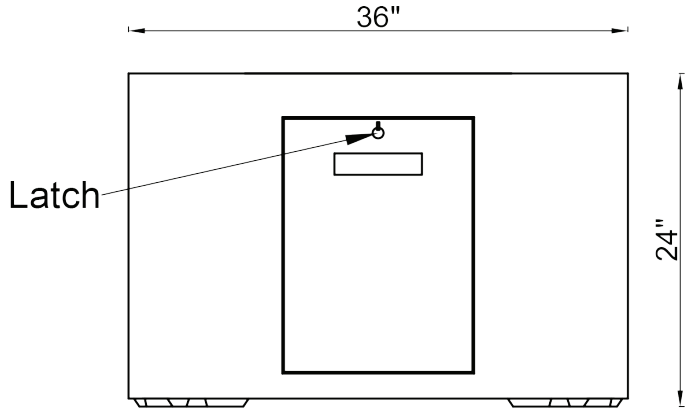

SIDE

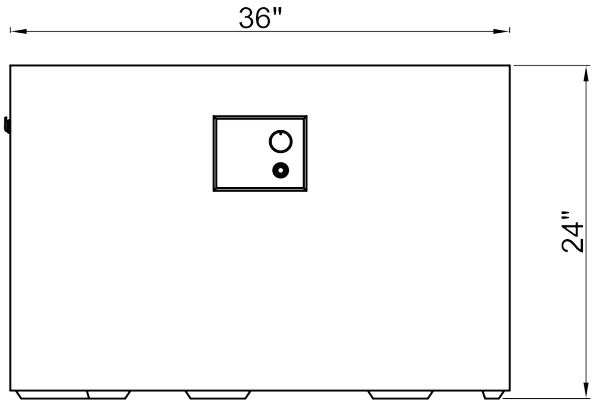

FRONT

PYROMANIA
FIRE FEATURES